8-bit D/A Converter with Input Register

FEATURES

- Complete D/A Converters:
  High-Speed Input Register
  Internal Reference
  Internal Output Amplifier
- ±1/2LSB Linearity and Monotonicity Guaranteed Over Temperature
- Small 18-Pin DIP
- Adjustment-Free
- ±1LSB Unadjusted Absolute Accuracy Over Temperature
- 3μsec Maximum Settling Time (10V Step to ±1/2LSB)
- Full Mil Operation −55°C to +125°C
- MIL-PRF-38534 Screening Optional.

18 PIN DIP

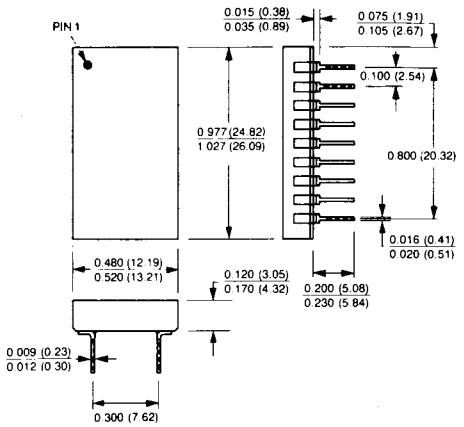

Dimensions in Inches
(millimeters)

DESCRIPTION

MN3020 is an 8-bit digital-to-analog converter complete with internal reference, output amplifier and input register. It is packaged in a hermetically sealed, ceramic, 18-pin dual-in-line and features the following: 4 user-selectable output ranges (2 unipolar, 2 bipolar), fast output settling (3μsec max for a 10 Volt change) and linearity and accuracy specifications guaranteed over temperature.

The MN3020's hybrid construction combines a low-drift voltage reference, Micro Networks ultrastable thin-film resistor networks, and the newest monolithic chips available. Active laser trimming results in a device with ± ½ LSB linearity and ± 1LSB unadjusted absolute accuracy error guaranteed over the entire operating temperature range.

Units are available for either 0°C to +70°C or −55°C to +125°C (H models) operation, and Micro Networks 100% tests and guarantees both linearity and accuracy at room temperature and at both operating temperature extremes. For military/aerospace or harsh-environment commercial/industrial applications, MN3020H/B CH is fully screened to MIL-PRF-38534.

MN3020's digital inputs are TTL compatible, and its internal input register facilitates interfacing to microprocessor and minicomputer data buses. Applications include microprocessor-based data distribution systems, programmable power supplies, low-resolution displays, and servo drivers.

MN3020 8-Bit D/A CONVERTER with INPUT REGISTER

ABSOLUTE MAXIMUM RATINGS

Operating Temperature	0°C to +70°C
	-55°C to +125°C ("H" Models)
Storage Temperature	-65°C to +150°C
+15V Supply (Pin 1)	+18 Volts
-15V Supply (Pin 13)	-18 Volts
+5V Supply (Pin 11)	-0.5 to +7 Volts
Digital Inputs (Pins 2-9)	-0.5 to +5.5 Volts
Register Enable (Pin 10)	-0.5 to +5.5 Volts

ORDERING INFORMATION

PART NUMBER — MN3020H/B CH

Standard part is specified for 0°C to +70°C operation.
Add "H" for specified -55°C to +125°C operation.
Add "/B" to "H" models for Environmental Stress Screening.
Add "CH" to "/B" models for 100% screening according to MIL-PRF-38534.

SPECIFICATIONS (T_A = 25°C, Supply Voltages ±15V and +5V, unless otherwise specified).

DIGITAL INPUTS	MIN.	TYP.	MAX.	UNITS
Resolution		8		Bits
Logic Coding: Unipolar Ranges Bipolar Ranges		Straight Binary Offset Binary		
Logic Levels: Logic "1" Logic "0"	2.0		 0.7	Volts Volts
Input Currents Data Inputs: Logic "1" (Vin = 2.4 Volts) Logic "0" (Vin = 0.3 Volts) Register Enable: Logic "1" (Vin = 2.4 Volts) Logic "0" (Vin = 0.3 Volts)			 30 - 0.6 40 - 0.8	 μA mA μA mA
Register Enable (Note 1): Pulse Width Setup Time Digital Data to Enable	 60 40.			 nSec nSec
ANALOG OUTPUTS				
Output Voltage Ranges: Unipolar Bipolar		0 to +10, 0 to -10 ±5, ±10		Volts Volts
Output Impedance Output Current	 ±4	0.5		Ω mA
TRANSFER CHARACTERISTICS				
Linearity Error (Notes 2, 4): 0°C to +70°C -55°C to +125°C		± ¼	± ½ ± ½	LSB LSB
Monotonicity	Guaranteed Over Temperature			
Absolute Accuracy Error (Notes 3, 4): 0°C to +70°C -55°C to +125°C		± ½	± 1 ± 1	LSB LSB
Unipolar Offset Error (Notes 3, 4): 0°C to +70°C -55°C to +125°C			± 1 ± 1	LSB LSB
Bipolar Offset Error (Notes 3, 4): 0°C to +70°C -55°C to +125°C			± 1 ± 1	LSB LSB
Offset Drift (Note 6): Unipolar Positive Range Unipolar Negative Range Bipolar Ranges		± 2 ±10 ±10		ppm of FSR/°C ppm of FSR/°C ppm of FSR/°C
Bipolar Zero Error: 0°C to +70°C -55°C to +125°C			± 1 ± 1	LSB LSB
Gain Error Gain Drift (Note 6)		± 0.1 ±15		% ppm/°C
DYNAMIC CHARACTERISTICS				
Settling Time (10 Volt Change to ±1/2 LSB) Output Slew Rate		 20	3.0	μSec Volts/μSec
POWER SUPPLIES				
Power Supply Range: +15V Supply -15V Supply +5V Supply	+14.0 -14.0 + 4.75	+15.0 -15.0 + 5.0	+18.0 -18.0 + 5.25	Volts Volts Volts
Power Supply Rejection: +15V Supply -15V Supply		± 0.03 ± 0.01		%FSR/%Vs %FSR/%Vs
Current Drain, Output Unloaded: +15V Supply -15V Supply +5V Supply		15 -11 23	20 -13 37	mA mA mA
Power Consumption		505	680	mW

SPECIFICATION NOTES:

1. Converter analog output will follow digital input when Register Enable is a logic "0". Digital input data will be latched and analog output voltage constant when Register Enable is a logic "1". The minimum Register Enable pulse width to latch new digital input data is 60 nSec. See Timing Diagram.
2. Micro Networks tests and guarantees maximum Linearity Error at room temperature and at both extremes of the specified operating temperature range.
3. The Absolute Accuracy Error specification applies over the converter's entire output range. See Absolute Acuracy Error section below for an explanation of how Micro Networks Corporation tests and specifies Absolute Accuracy Error, Offset Error, and Bipolar Zero Error.
4. 1 LSB for an 8 bit converter corresponds to 0.39%FSR. See Note 5.
5. FSR stands for Full Scale Range and is equal to the peak to peak voltage of the selected output range. For the ±10V output range, FSR is 20 volts, and 1 LSB is equal to 78mV. For the 0 to +10V range, FSR is 10 volts, and 1 LSB is equal to 39mV.
6. Over specified operating temperature range.

BLOCK DIAGRAM

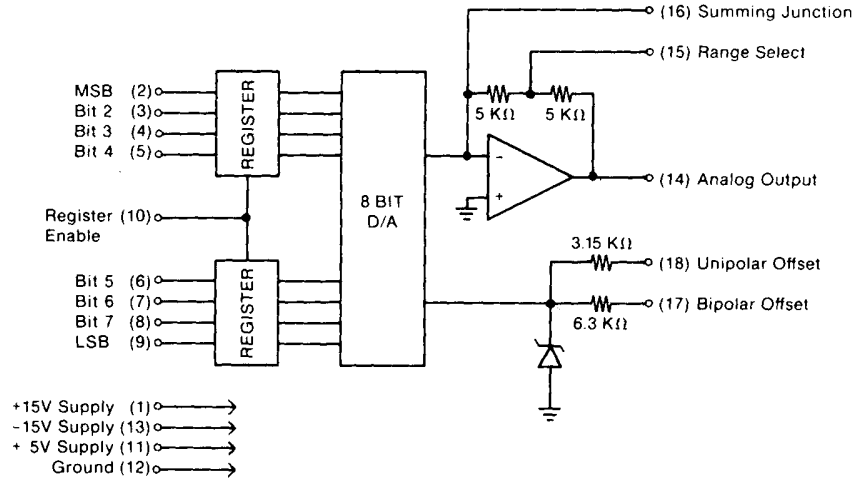

PIN DESIGNATIONS

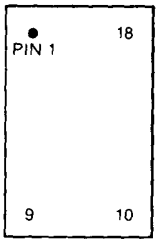

1.	+15V Supply	18.	Unipolar Offset
2.	Bit 1 (MSB)	17.	Bipolar Offset
3.	Bit 2	16.	Summing Junction
4.	Bit 3	15.	Range Select
5.	Bit 4	14.	Analog Output
6.	Bit 5	13.	-15V Supply
7.	Bit 6	12.	Ground
8.	Bit 7	11.	+5V Supply
9.	Bit 8 (LSB)	10.	Register Enable

ABSOLUTE ACCURACY ERROR

The Absolute Accuracy Error of a voltage output D/A converter is the difference between the actual, unadjusted, output voltage that appears following the application of a given digital input code and the ideal or expected output voltage for that code. This difference is usually expressed in LSB's or %FSR (see Note 5 above). Absolute Accuracy Error includes gain, offset, linearity, noise and all other errors, and includes the drifts of these errors when specified over temperature.

For the MN3020, Micro Networks tests Absolute Acuracy Error at both endpoints of all unipolar output ranges and at both endpoints and the midpoint of all bipolar output ranges. These tests are performed at both room temperature and at the high and low extremes of the specified extended temperature range.

Example: For the MN3020H's ±10V output range (see Input Coding and Output Range Selection), the expected output for a 0000 0000 digital input is -10 volts; the expected output for a 1000 0000 digital input is 0 volts; and the expected output for a 1111 1111 digital input is +9.922 volts. Micro Networks measures all three actual, unadjusted output voltages at -55°C, +25°C and +125°C and guarantees them to be within ±1 LSB of their ideal values.

Unipolar Offset Error, Bipolar Offset Error, and Bipolar Zero Error are all Absolute Accuracy Errors. Their definitions differ with respect to where along the converter's digital input/analog output transfer function the errors are to be measured, i.e., different analog output errors are measured at different digital input codes.

OFFSET ERROR—For the MN3020; Offset Error is the Absolute Accuracy Error measured when the digital input is 0000 0000. For the unipolar positive range, this specification tells how accurate the unadjusted converter will be when its output is supposed to be zero volts. For the unipolar negative and the bipolar ranges, it tells how accurate the unadjusted converter will be when its output is supposed to be at its munus full scale value.

BIPOLAR ZERO ERROR—Bipolar Zero Error is the Absolute Accuracy Error measured when the digital input is 1000 0000 and the converter is operating in a bipolar mode. It is the error measured when the output is supposed to be zero volts on the ±5V and ±10V output ranges.

It is redundant to specify Offset and Bipolar Zero Errors after giving an Absolute Accuracy Error spec that applies over the converter's entire output range. We have provided the Offset and Bipolar Zero Error specs to simplify comparing the MN3020 to other 8 bit D/A's. Be sure you clearly understand each manufacturer's specification definitions before you compare converters solely on a data sheet basis.

GAIN ERROR—Gain Error is the difference between the ideal and the measured values of a converter's full scale range (minus 1 LSB). See Note 5 above. It is a measure of the slope of the converter's transfer function. Gain Error is not a type of Absolute Accuracy Error, but it can be calculated using two Absolute Accuracy Error measurements. It is equivalent to the Absolute Accuracy Error measured for the 1111 1111 digital input minus that measured for the 0000 0000 digital input, and it is usually expressed as a percentage.

See the Converter Tutorial Section of the Micro Networks' Product Catalogue for a complete discussion of converter specifications.

APPLICATIONS INFORMATION

LAYOUT CONSIDERATIONS—Proper attention to layout and decoupling is necessary to obtain specified accuracy from the MN3020. The unit's Ground pin (pin 12) should be tied to system analog ground as close to the package as possible, preferably through a large ground plane underneath the package.

Power supplies should be decoupled with tantalum or electrolytic type capacitors located close to the MN3020. For optimum performance, 1μF capacitors paralleled with 0.01μF ceramic capacitors should be used as shown in the diagrams below.

POWER SUPPLY DECOUPLING

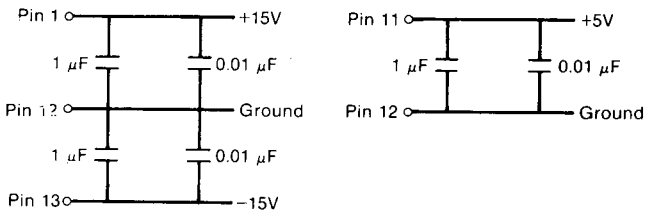

Coupling between analog and digital signals should be minimized to avoid noise pickup. Short jumpers should be used when tying pins together for output range selection, especially when connecting either of the offset pins (pins 17 and 18) to the summing junction (pin 16). If external offset adjustment is employed, the 1.8 megom resistor should be located as close to the package as possible.

OPTIONAL OFFSET ADJUSTMENT—A constant offset voltage can be added to or subtracted from the output of the MN3020 for the purpose of increasing accuracy at and around a particular output level.

This is accomplished by using an external potentiometer to add or subtract current at the summing junction of the MN3020's internal output amplifier. Because the MN3020 is not equipped for gain adjustment, offsetting the output to increase the accuracy of any particular output level may degrade the accuracy of other levels. Adjustment should be made following warm-up and a multiturn potentiometer with a TCR of 100 ppm/°C or less should be used to minimize drift with temperature.

Connect the offset potentiometer as shown; apply the desired input code (see Coding Table); adjust the offset potentiometer until the desired output level is achieved. If offset adjustment is not used, pin 16 should be connected as described in the Range Selection section.

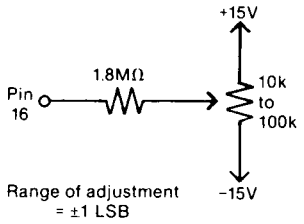

MICROPROCESSOR INTERFACING — Interfacing the MN3020 to a microprocessor is simplified by the MN3020's internal register. External address and control decoding is required, however. These functions can usually be accomplished by NANDing the appropriate address and control lines and using the output to drive the MN3020's Register Enable input.

For most processors, valid data remains on the data bus for a period of time after the removal of either valid address or control signals. This results in data being latched into the MN3020 immediately after one of the address or control signals changes but before valid data goes away.

For connecting multiple MN3020's to a processor data bus in data distribution system applications, 3 line to 8 line and 4 line to 16 line decoders can be used to selectively active the MN3020s' input registers.

The MN3020's digital data inputs can usually be tied directly to the processor's data bus with each input presenting approximately one low power TTL load to the bus.

INPUT CODING AND OUTPUT RANGE SELECTION

DIGITAL INPUT	ANALOG OUTPUT (DC VOLTS)			
MSB LSB	UNIPOLAR POSITIVE	UNIPOLAR NEGATIVE	BIPOLAR ±5	BIPOLAR ±10
00000000	0.000	-9.961	-5.000	-10.000
00000001	+0.039	-9.922	-4.961	- 9.922
01111111	+4.961	-5.000	-0.039	- 0.078
10000000	+5.000	-4.961	0.000	0.000
11111110	+9.922	-0.039	+4.922	+ 9.844
11111111	+9.961	0.000	+4.961	+ 9.922
CONNECT PIN TO PIN	14 to 15 17 to GND 18 to GND	14 to 15 16 to 18 17 to GND	14 to 15 16 to 17 18 to GND	16 to 17 18 to GND

INPUT REGISTER TIMING DIAGRAM

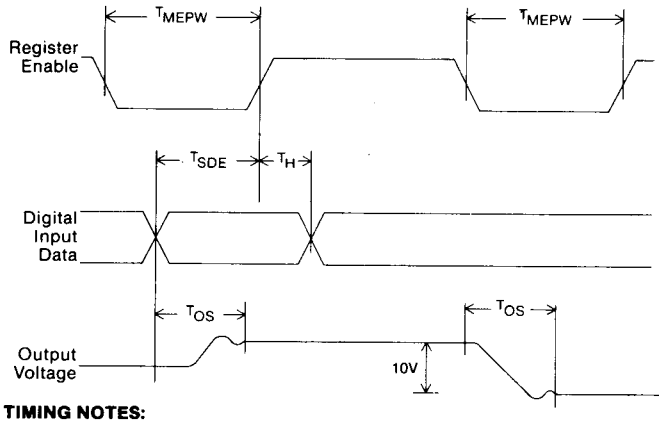

TIMING NOTES:

T_{MEPW} Minimum enable pulse width is 60 nSec.

T_{SDE} Minimum setup time digital input data to enable is 40 nSec.

T_H Hold time is defined as the required delay between the leading edge of register enable and the end of valid input data. For the MN3020, the hold time is zero.

T_{OS} Output settling time for a 10 volt change to ±1/2 LSB is 3 μSec max.