DWG NO.	SH	REV
088-00387	1 OF 1	P1

REVISIONS				
ECN	REV.	DESCRIPTION	CHNG/DATE	APPVD/DATE
XXX	P1	PRELIMINARY RELEASE	2013-06-24	

NOTES:

1. HOUSING: 70/30 CN/NI
   ELECTRONIC GRADE

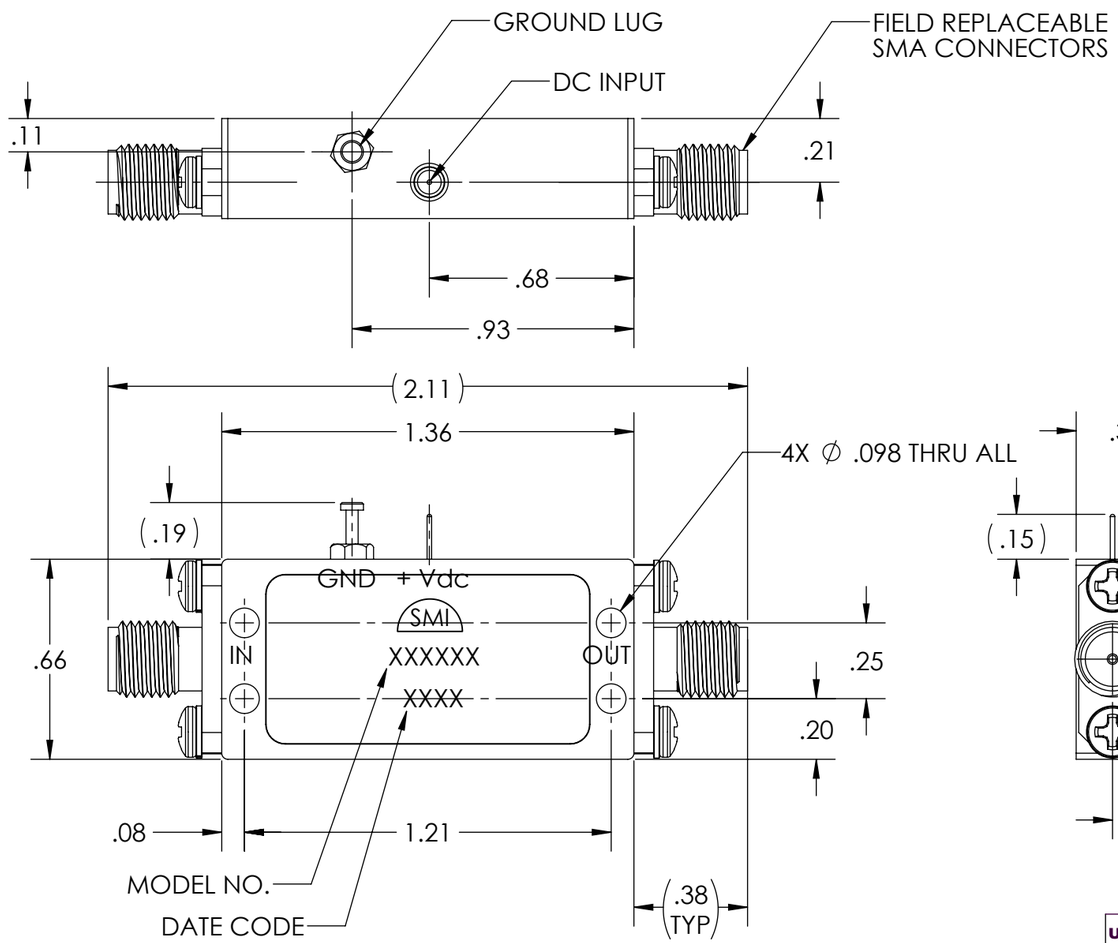

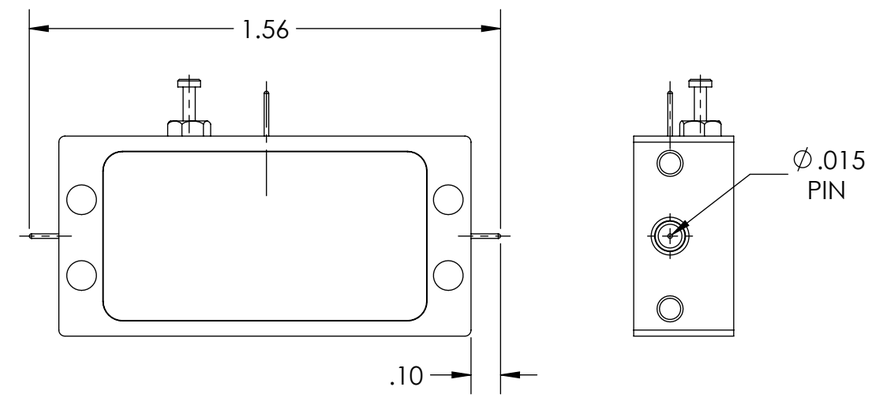

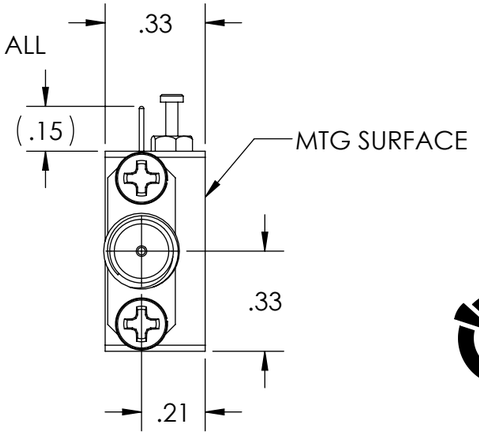

WITHOUT SMA CONNECTOR

CAUTION

THIS ASSEMBLY CONTAINS PARTS SENSITIVE TO DAMAGE BY ELECTROSTATIC DISCHARGE (ESD). USE ESD PRECAUTIONARY PROCEDURES WHEN TOUCHING, REMOVING OR INSERTING

SEE SEPARATE PARTS LIST IN ELECTRONIC STORAGE

UNLESS OTHERWISE SPECIFIED

* INTERPRET DRAWING IAW ASME Y14.100-2004
* DIMENSIONING AND TOLERANCING IAW ASME Y14.5-1994
* PARENTHETICAL INFORMATION FOR REFERENCE ONLY
* DIMENSIONAL LIMITS APPLY BEFORE PROCESSES
* DIMENSIONS ARE IN INCHES
* TOLERANCES ARE: ANGLES ±1.0° 2 PLACE DECIMAL ±.02 3 PLACE DECIMAL ±.005
* SURFACE FINISH 63
* REMOVE ALL BURRS AND SHARP EDGES .010 RAD MAX.
* CONCENTRICITY MACHINED DIA: .002 FIM
* MACHINED TOOL MISMATCH: .002 MAX.

DO NOT SCALE DRAWING

3rd ANGLE PROJECTION
ANSI

DRAWN	WAR	2013-06-24
CHECKED		
ENGRG	HP	2013-06-24
MFG		
QA		

SPECTRUM MICROWAVE, INC
2707 Black Lake Place
Philadelphia, PA 19154-1008 (USA)

TITLE

OUTLINE, H2L

SIZE	CAGE CODE	DWG NO.	REV
B	60979	088-00387	P1

SCALE: 2:1 SHEET 1 OF 1

SPECTRUM MICROWAVE PROPRIETARY INFORMATION
THIS DOCUMENT IS THE SOLE PROPERTY OF SPECTRUM MICROWAVE, INC. THE RELEASE OF DATA CONTAINED IN THIS DOCUMENT AND THE REPRODUCTION OF THIS DOCUMENT, IN WHOLE OR IN PART, WITHOUT THE WRITTEN PERMISSION OF SPECTRUM MICROWAVE, INC ARE PROHIBITED.

COMPUTER ASSISTED DRAWING
GENERATED USING SOLIDWORKS 2007

FORM NO. 1054 SIZE B1